单门门禁控制器

中英文说明书

V1.0.0

1.2.51.18.11246-000

重要安全须知

使用产品前，请认真阅读并严格遵守以下要求，以免您的产品和财产受到损失。

⚠ 注意

- 请在允许的温度和湿度下运输、使用、存储本产品。
- 请勿将产品放置在阳光直射的地方或发热源附近。
- 请勿将产品放置在潮湿、有灰尘或煤烟的场所。
- 请将产品安装在通风良好的场所，禁止堵塞设备的通风口。
- 请将产品安装在平稳的场所。
- 请勿将液体滴到溅到产品上。
- 请勿将其他物品放置于产品上面。
- 请勿随意拆卸本产品。

特别声明

- 产品请以实物为准，说明书仅供参考。
- 产品实时更新，如有升级不再另行通知。
- 最新程序及补充说明文档敬请与公司客服部联系。
- 如果不按照说明中的指导操作，因此造成的损失由使用方承担。
- 产品说明中有疑问或争议的，以公司最终解释为准。

1 概述

单门门禁控制器作为控制设备，实现对视频监控和可视对讲的补充和完善，产品外观简洁时尚、功能强大，适合高端商业大厦、集团物业和智能社区。

控制器具有丰富的功能，功能如下：

- 工业型专业设计，带锁具及铰链转动结构，可承受80kg力，防暴性能优良。
- 集成报警、门禁、视频监控、消防报警和梯控模块接入。
- 支持2台读卡器。
- 支持5组信号输入（开门按钮×1，门磁报警×1，防拆报警×1，入侵报警×2）。
- 支持3组控制输出（电锁×1，警报×2）。
- 带RS485接口，可扩展连接电梯控制模块、报警或家居控制模块、或者通过RS485连接上位机进行通讯。
- FLASH存储容量为16M（可扩展32M），最大支持100,000个持卡者，150,000条刷卡记录。
- 支持防拆报警、非法闯入报警、开门超时报警、支持胁迫卡及胁迫码设定，支持黑白名单及巡逻卡设定。
- 支持卡片的有效时段设置、密码设置以及有效期限设置，来宾卡还具有使用次数设定功能。
- 支持128组时间表、128组时段表及128组假日时段表。
- 支持断电数据永久保存，自带RTC（夏令时），在线升级。

2 外观尺寸

单门门禁控制器的外观和尺寸如图2-1和图2-2所示，尺寸单位为mm。

图2-1 外观尺寸1

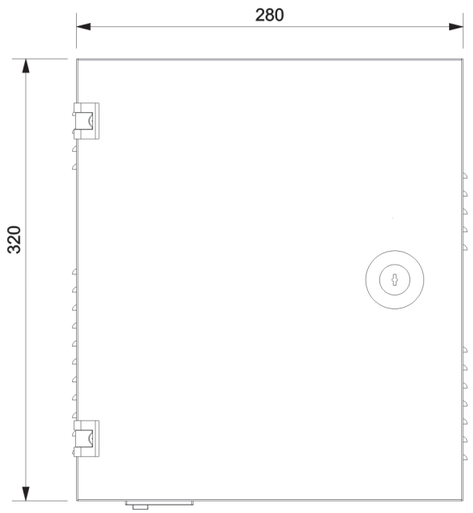

图2-2 外观尺寸2

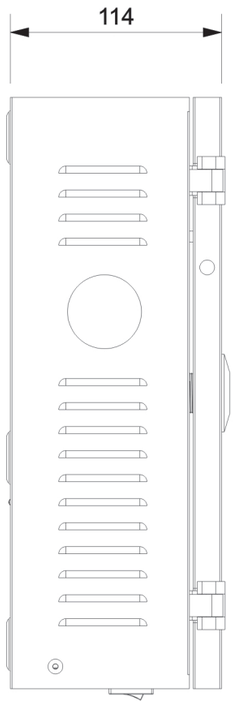

3 设备安装

设备安装示意图如图3-1所示。

图3-1 安装示意图

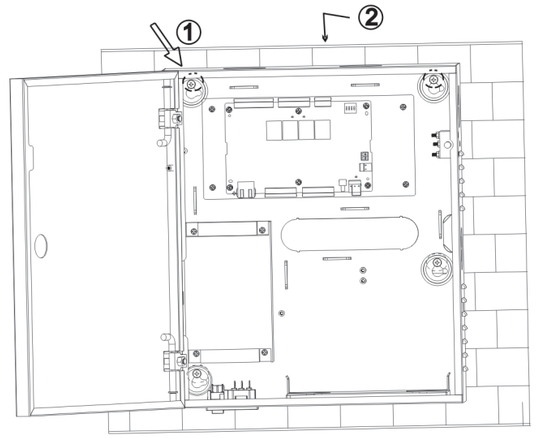

安装步骤如下：

步骤1 将螺钉通过膨胀螺母按整机后壳挂孔测量间距定位固定在墙上。

步骤2 通过固定在墙体的螺钉，将整机挂到墙体上。

4 接线和系统架构

4.1 接线示意

设备接线示意图如图4-1所示。

图4-1 接线示意图

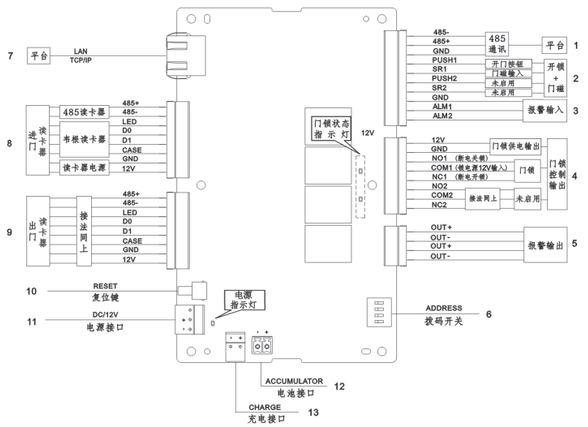

4.2 系统架构

单门门禁控制器与门锁、读卡器等连接的系统架构如图4-2所示。

图4-2 系统架构图

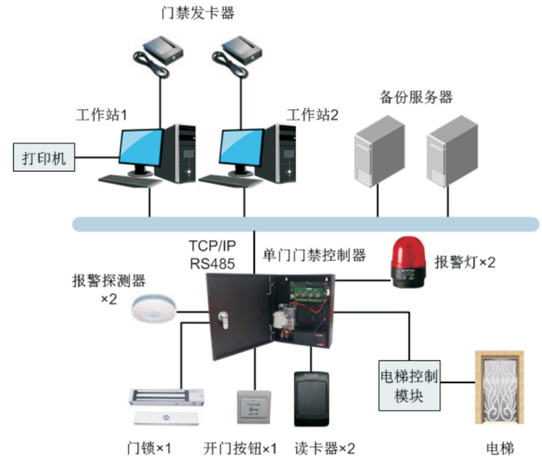

5 技术参数

参数	规格
处理器	32位ARM处理器
存储容量	16M
最大用户数量	100,000
最大存储记录	150,000
读卡器通讯接口	韦根、RS485
平台通讯接口	TCP/IP、RS485
接入读卡器数量	2组
工作电源	额定电压10-15VDC，额定电流0.75A
时间组	128
时间段	128
节假日	128
开门模式	卡、卡+密码、密码、卡或密码、卡+指纹、指纹+密码、指纹或卡或密码、分时段
跨网段联网	支持
防反潜	支持
单门双向刷卡	支持
实时监控	支持
火警联动	支持
防拆报警	支持
非法闯入报警	支持
开门超时报警	支持
胁迫卡及胁迫码设定	支持
夏令时间和自动校时	支持
在线升级	支持

Single–door Access Controller

User’s Manual

V1.0.0

1.2.51.18.11246-000

Important Safeguards and Warnings

Please read the following safeguards and warnings carefully before using the product in order to avoid damages and losses.

Note:

- Do not expose the device to lampblack, steam or dust. Otherwise it may cause fire or electric shock.
- Do not install the device at position exposed to sunlight or in high temperature. Temperature rise in device may cause fire.
- Do not expose the device to humid environment. Otherwise it may cause fire.
- The device must be installed on solid and flat surface in order to guarantee safety under load and earthquake. Otherwise, it may cause device to fall off or turnover.
- Do not place the device on carpet or quilt.
- Do not block air vent of the device or ventilation around the device. Otherwise, temperature in device will rise and may cause fire.
- Do not place any object on the device.
- Do not disassemble the device without professional instruction.

Warning:

- Please use battery properly to avoid fire, explosion and other dangers.
- Please replace used battery with battery of the same type.
- Do not use power line other than the one specified. Please use it properly. Otherwise, it may cause fire or electric shock.

Special Announcement

- This manual is for reference only.
- All the designs and software here are subject to change without prior written notice.
- All trademarks and registered trademarks are the properties of their respective owners.
- If there is any uncertainty or controversy, please refer to the final explanation of us.
- Please visit our website for more information.

1 Overview

The single–door access controller is a controlling device which compensates video monitoring and bidirectional talk. It has neat and modern design with strong functionality, suitable for commercial building, corporation property and intelligent community.

It has:

- Industrial professional design with lock and hinge. It max load–bearing is 80kg under good vandal–proof design.
- It integrates alarm, access control, video monitoring, fire alarm and control module input.
- It supports 2 sets of card readers.
- It supports 5 groups of input signal (unlock button *1, door sensor *1, vandal–proof alarm *1, intrusion alarm *2).
- It supports 3 groups of output control (electric lock *1, alarm *2).
- Rs485 port, may extend to connect to lift control module, alarm or household control module. It may connect upper device via Rs485.
- FLASH storage capacity is 16M (may extend to 32M), max supports 100,000 card holders and 150,000 records.
- It supports vandal–proof alarm, illegal intrusion alarm, unlock overtime alarm, forced card alarm and forced setup. It also supports black–white list and patrol card setup
- It supports setup of card period, password and validity. Guest card in additional has setup of times of use.
- It supports 128 groups of schedules, 128 groups of periods and 128 groups of holiday schedule.
- Data storage during outage, built–in RTC (support DST), online upgrading.

2 Device Appearance

Single–door access controller appearance and dimension are shown in Figure 2–1 Dimension 1 and Figure 2– 2 Dimension 2. Unit is mm.

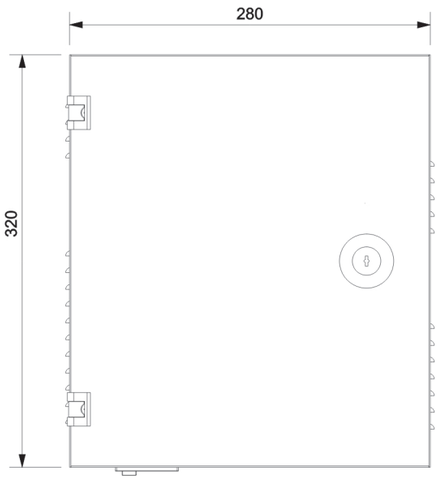

Figure 2– 1 Dimension 1

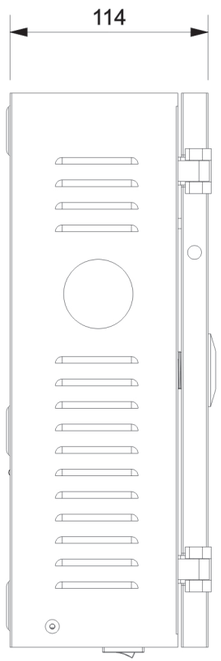

Figure 2– 2 Dimension 2

3 Device Installation

Device installation is shown in Figure 3– 1.

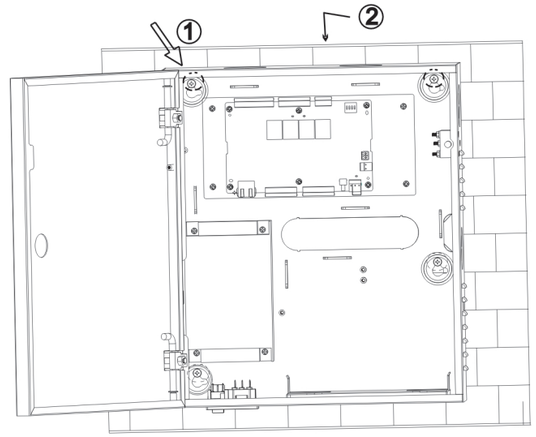

Figure 3– 1

Installation steps:

Step1. Fix screw via expansion bolt to hang the device on wall according to the distance of holes at rear of device.

Step2. Via screw fixed on wall to hang the device on wall.

4 System Cabling and Structure

4.1 Cabling

Device cabling is shown in Figure 4– 1.

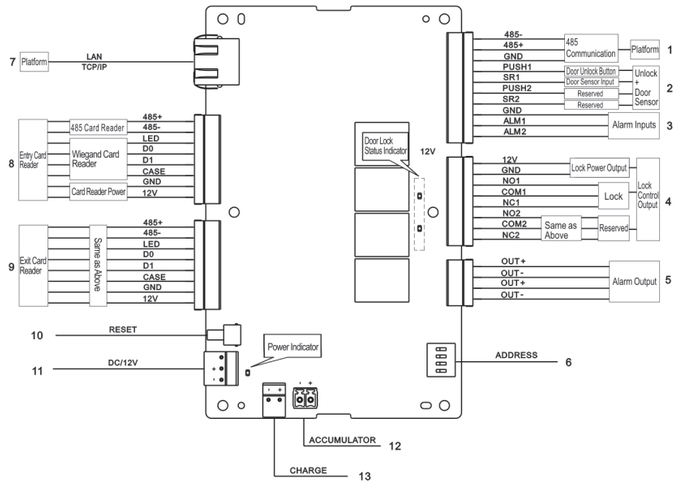

Figure 4– 1

4.2 Structure

Access controller, lock, card reader and etc. combine a system as in Figure 4– 2.

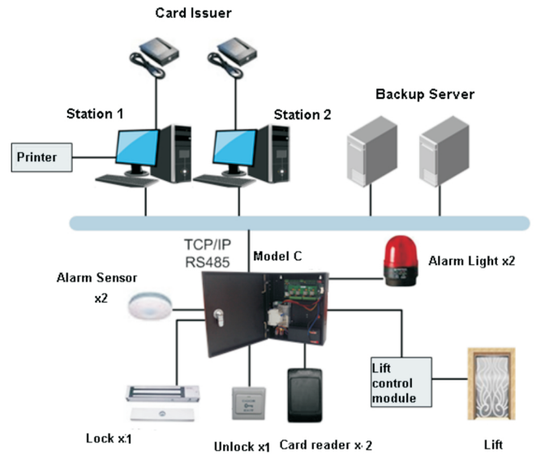

Figure 4– 2

5 Technical Specification

Parameter	Specification
Processor	32 bit ARM processor
Storage Capacity	16M
Max User	100,000
Max Record	150,000
Card Reader Communication Port	Wiegand, RS485
Platform Communication Port	TCP/IP, RS485
Input Card Reader Quantity	2 groups
Working Power	Rated power 10–15VDC, rated current 0.75A
Schedule	128
Period	128
Holiday	128
Unlock Mode	Card, card+password, password, card or password, card+fingerprint, fingerprint+password, fingerprint or card or password, by period.
Cross–segment Network	Support
Anti–passby	Support
Dual–way swipe	Support
Single–door bidirectional swiping	Support
Real–time Monitoring	Support
Alarm Activation	Support
Vandal–proof Alarm	Support
Illegal Intrusion Alarm	Support
Unlock Overtime Alarm	Support
Forced Card and Password Setup	Support
DST and Time Sync	Support
Online Upgrading	Support

Note:

- **This manual is for reference only. Slight difference may be found in user interface.**
- **All the designs and software here are subject to change without prior written notice.**
- **All trademarks and registered trademarks are the properties of their respective owners.**
- **If there is any uncertainty or controversy, please refer to the final explanation of us.**
- **Please visit our website or contact your local service engineer for more information.**